MDF6/6

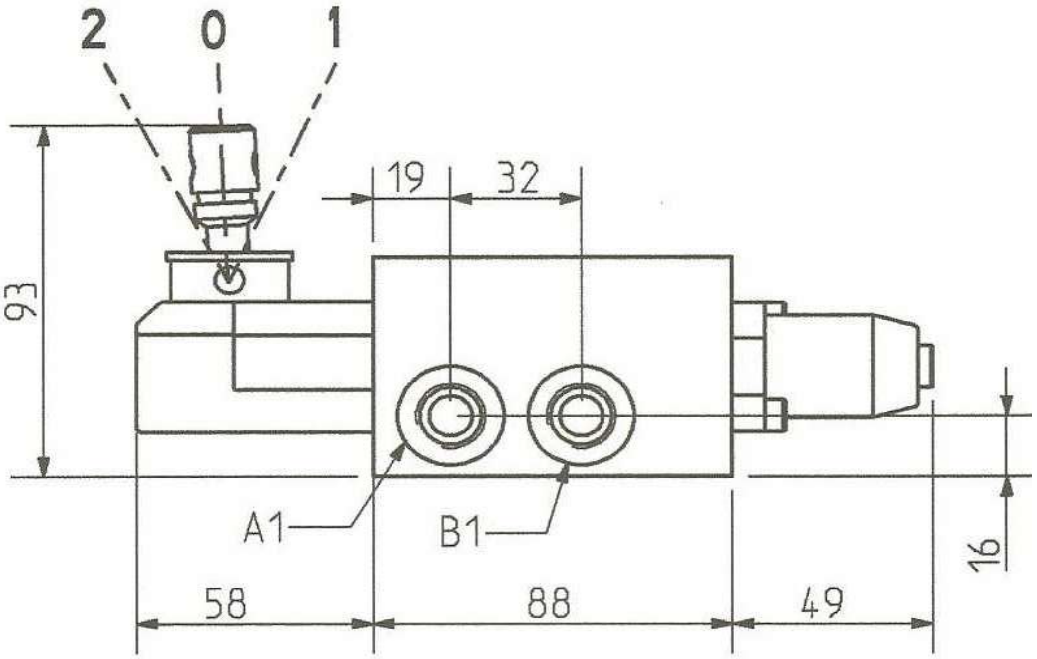

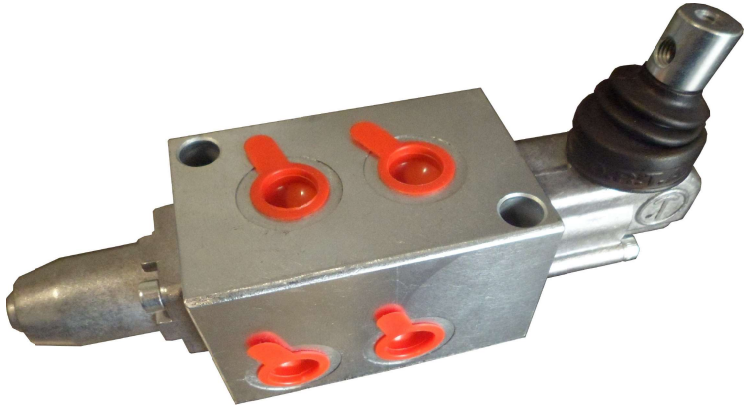
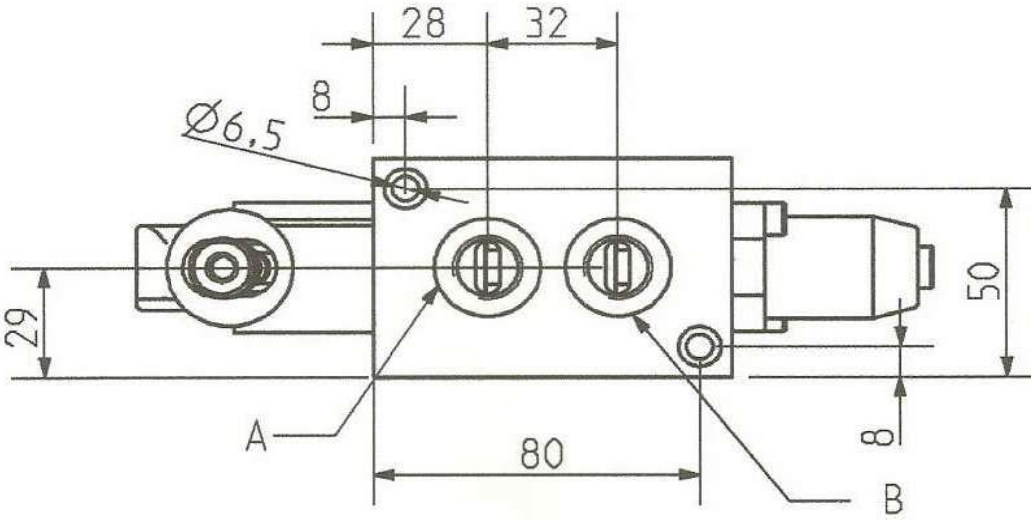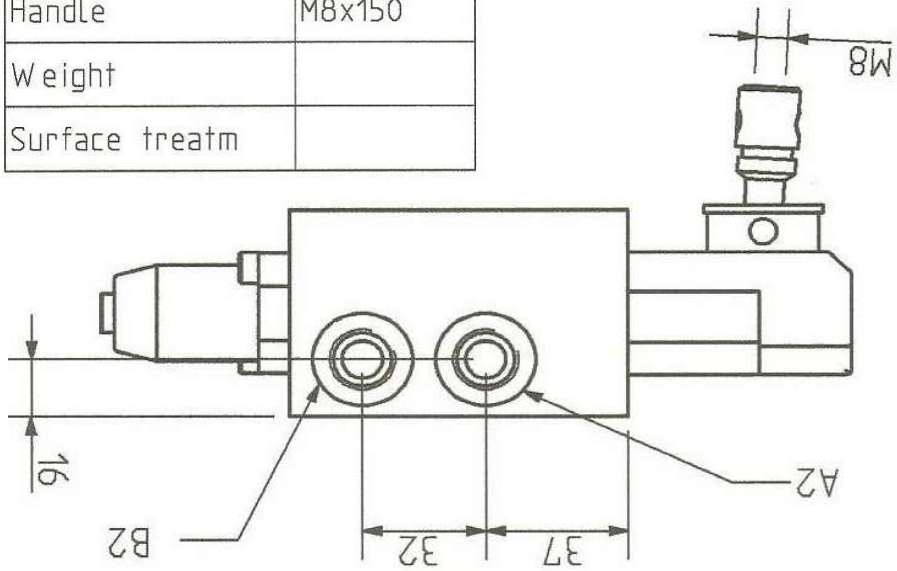
Max pressure	250 bar
Max flow	40 lt/min
Thread	3/8"
Handle	M8x150
Weight	
Surface treatm