C-...GAS100T Standard Aluminium Body (for 2 way cartridges)

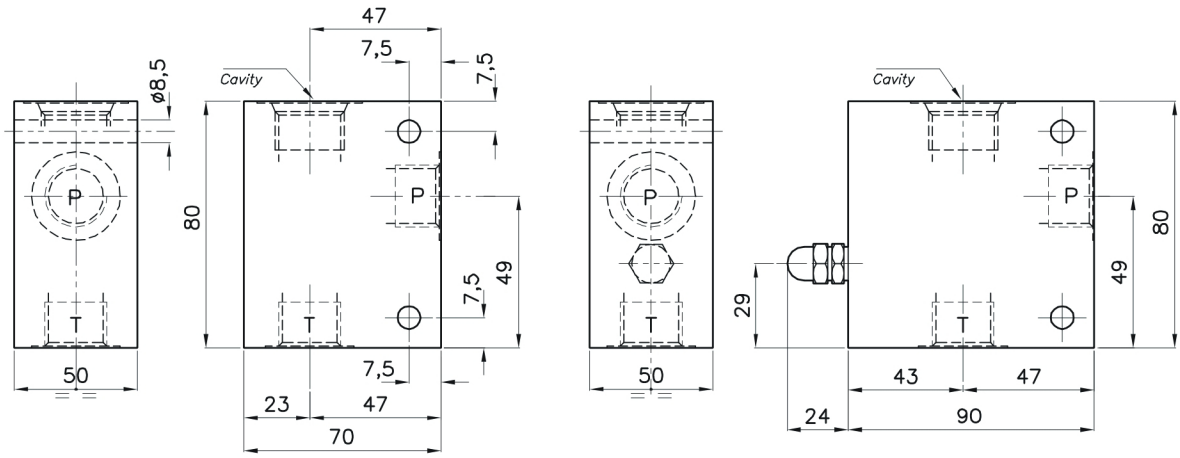

DIMENSIONS

Body Number	Cavity	Port Size T-P GAS (BSPP)
530	CE-114-N (Ø 30mm-1"GAS)	3/4"
533	CE-114-N (Ø 30mm-1"GAS)	1"

HOW TO ORDER

005 530 E 0 1

Body Number
530
533

Emergency screw
E

UNIT 11 ASHLEY ESTATE, EXMOOR AVENUE, SCUNTHORPE, N.LINCOLNSHIRE. DN15 8NJ